DRG.NO	▽ 8–25	▽▽ 1.6–8	▽▽▽ 0.025–1.6	▽▽▽▽ < 0.025

REVISION COLUMN FILE

REV	ZONE	DESCRIPTION	DATE	REMARKS	APPROVED BY

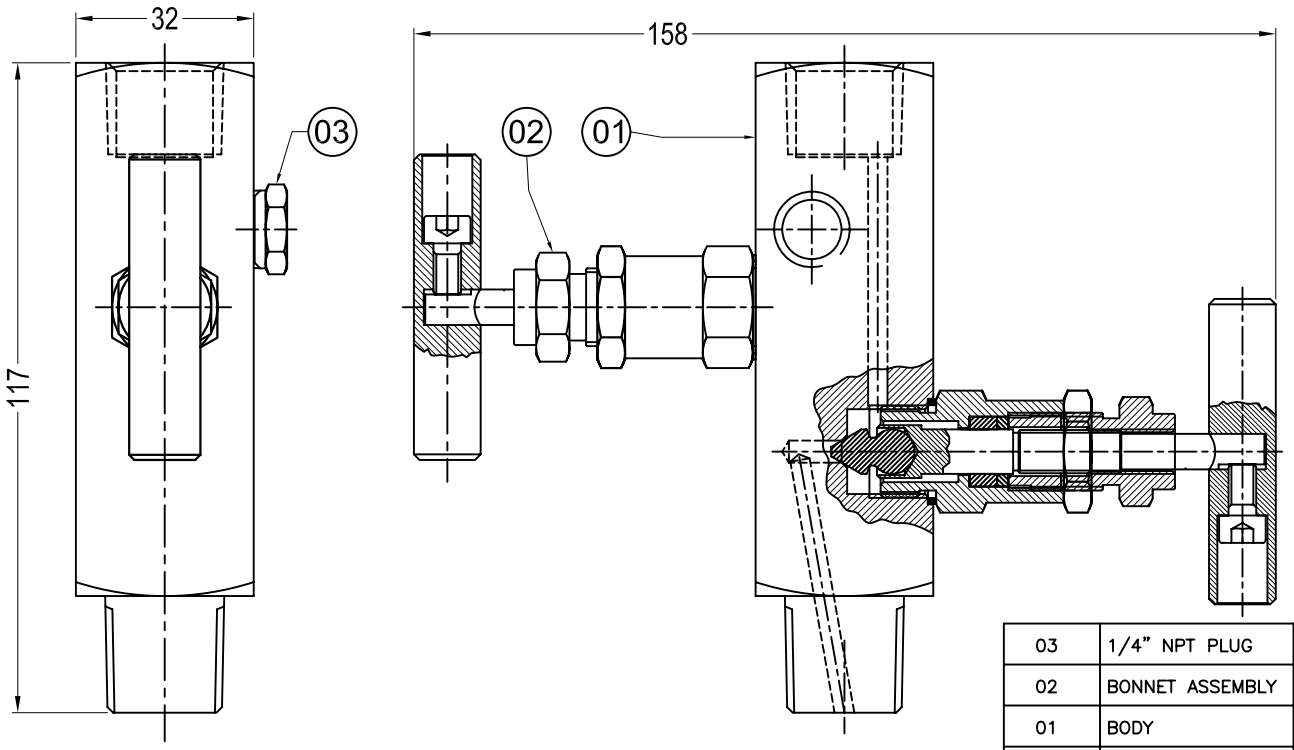

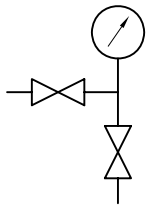

PART NO.	DESCRIPTION	MAT	QTY	DWG.NO.
03	1/4" NPT PLUG	SS316	01	APL.1/N14
02	BONNET ASSEMBLY	SS316	02	AB1.1.1
01	BODY	SS316	01	A2VM RMF/01

CO–ORDINATED BY

MACHINING DEVIATIONS FOR NON–TOLERANCED DIMENSIONS

LENGTH IN mm OF SHORTER SIDE OF ANGLES				LENGTH OR DIA	UPTO 6	6–30	30–120	120–315
UPTO 10	10–50	50–120	OVER 120–400					
±1°	±0°–30'	±0°–20'	±0°–10'		±0.1	±0.2	±0.3	±0.5

ASS'Y GROUP:

ALL DIMENSIONS ARE IN 'mm' UNLESS OTHERWISE STATED

ACCU TECH™

SCALE	SCALE	DATE
DRAWN	DRN	DATE
CHECKED		
APPROVED		

TITLE
1/2" NPT MxF TWO VALVE MANIFOLD

MODEL: A 2VM RMF

REV

DRG.NO A 2VM RMF

SHEET OF